
THE
REEL THING XXXII
NOVEMBER 4, 2013
THE BYRD THEATER
RICHMOND, VIRGINIA

No enterprise in the non-profit world can accomplish much without the enlightened, altruistic cooperation of its benefactors. The Reel Thing has been privileged to enjoy the generous support of the professional community since its inception. The organizers of The Reel Thing would like to recognize and thank all the individuals and organizations who contributed their considerable skills, energy and enthusiasm to the symposium. As always, we thank our presenters, who share their knowledge and experience in this symposium. And we would like to recognize the following individuals and organizations for their support and collaboration:

Gary Adams Beverly Graham Kristina Kersels

Laura Rooney Leah Tuttle

The Staff and Management of the Byrd Theater

The Reel Thing is made possible by the active and engaged support of some of the most important and innovative companies in the archival field. These firms work side by side with archivists and asset managers to constantly raise the standard of preservation and restoration, and to find new ways to insure that moving images from public collections and the private sector will retain their quality and remain accessible as a resource for future generations. We offer our gratitude for their indispensable sponsorship of AMIA and The Reel Thing.

Deluxe Entertainment Services Group
Iron Mountain Entertainment Services

LAC Group Reflex Technologies

Audio Mechanics AV Preservation by reto.ch BluWave Audio
Cinelicious Crawford Media Services Digital Film Technology
Digital Vision DJ Audio Fotokem Fuji Motion Picture Film
L'Immagine Ritrovata Kodak The Media Preserve
MTI Film NT Audio Video Film Labs Post Haste Digital
Prasad Group Underground Archives XTracks

T H E

R E E L T H I N G XXXII

T h e B y r d T h e a t e r
Richmond, Virginia

Wednesday, November 6, 2013 : 12:30pm - 5:30pm

☯

Torpedo VIX3: An Easy and Affordable 35mm Desktop Film Printer
Dino Everett, Hugh Hefner Archive, USC

☯

Roots and Stems: Superior Practice in Remastering Stereophonic Cinema
John Polito, Audio Mechanics

☯

***The Timeline of Historical Film Colors* and the DIASTOR Project**
Prof. Dr. Barbara Flueckiger, University of Zurich

☯

The Alan Stark Award
Presented by Ralph Sargent, Film Technology Company

☯

B R E A K

☯

Digital Color Decoding Of Kodacolor Film
Tom Aschenbach, Video and Film Solutions

☯

A Demonstrated Concept of High-Speed High-Dynamic Range Black -and-White Film Scanning
Sai Prasad, Prasad Group

☯

The Digital Revival of Gerhardt Lamprecht Films
Daniel Meiller Stiftung Deutsche Kinemathek

☯

Restoration of a Large Format Feature: *It's A Mad Mad Mad Mad World*
Robert A. Harris, archivist, Karen Stetler, The Criterion Collection and Andrew Oran, FotoKem

☯

☯

Torpedo VIX3: An Easy and Affordable 35mm Desktop Film Printer

Dino Everett, Hugh Hefner Archive, USC and Victor Virovac, Technical Developer

The digital dilemma affects us all in different ways, and there is no one way to approach the problem that is universally effective or economically compelling. In particular, small and medium sized archives need to be creative and flexible, matching technical resources to their institutional objectives. The Torpedo VIX3 is a 35mm desktop printer, developed at the USC Hefner archive by Victor Virovac and Dino Everett. It fits on a table, is roughly the size of a Xerox machine and is used to take digital files back to 35mm negative film for the purpose of archival storage. It is an integrated system and utilizes existing technologies such as a SONY OLED professional reference monitor and any Apple computer running Snow Leopard. The objective was to build a user-friendly, easy-to-operate modular device rather than a costly stand-alone unit that relies on a single supplier and a dedicated technical staff. The VIX3 is designed for archives that chose to make film elements from digital files for preservation rather than (or in addition to) migrating digital data. This device is designed to support and complement the established workflow of a small to medium scale archive, and doesn't necessitate the support of a complex and costly infrastructure. One of the values of this alternative is to make it easier for an archive to continue working with film. But the printer could also be deployed in support of other activities, such as the archiving of natively digital material on film, or the creation of printing negatives for digitally restored films.

☯

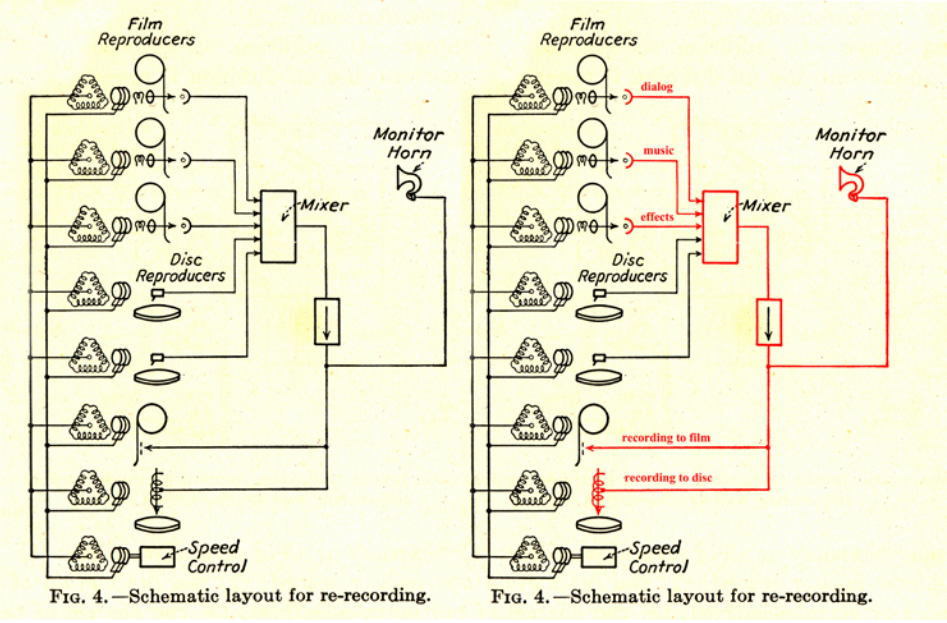

FIG. 4.—Schematic layout for re-recording. FIG. 4.—Schematic layout for re-recording.

Roots and Stems: Superior Practice in Remastering Stereophonic Cinema

John Polito, Audio Mechanics

As we preserve and migrate analog film resources, the ne plus ultra of image quality is the original negative. In audio restoration, the quality of new tools for extraction and processing as well as the widespread adoption of higher quality audio playback across all of the listening environments make it imperative to be able to capture and reproduce the richest audio possible. In the case of film resources, the ultimate quality can only be extracted from the original negative, as opposed to intermediates. Recourse to the original

audio source – the stems - is analogous to using the original negative. The superiority of master mag stems over an LtRt printmaster for remastering Dolby stereo titles will be demonstrated. The presentation will focus on the benefits of this approach, from the higher fidelity to the original it affords, to the reformatting that can result in a long-term preservation benefit. Examples will be played from titles recently worked on, and workflow requirements will also be discussed.

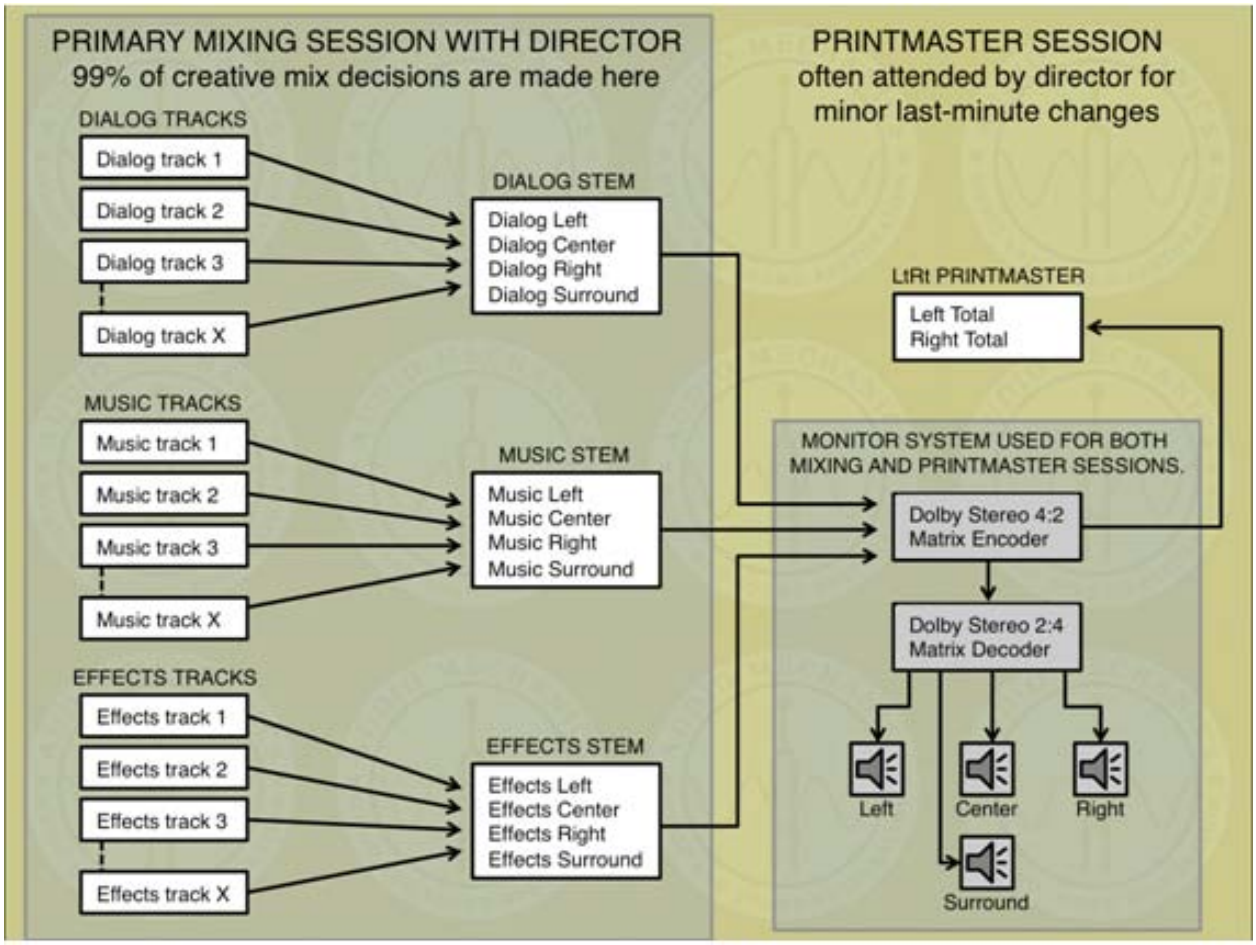

☯

The Timeline of Historical Film Colors and the DIASTOR Project

Prof. Dr. Barbara Flueckiger, University of Zurich

More than a year ago the database Timeline of Historical Film Colors was published online as a result of Barbara Flueckiger's studies in the framework of her research project "Film History Re-mastered" funded by the Swiss National Science Foundation. This free online resource aims at providing comprehensive information about several hundred color processes that were invented during the course of film history. In addition to an overview with basic information consisting of a bibliography and scans from original film prints, the database offers detailed information on most of these processes including a short description, a great variety of scans and original illustrations, original technical papers, secondary sources, a filmography, links and downloads. At the end of May 2013 a new version was published which allows authors, film historians, restoration experts and archivists to contribute directly.

Very recently the applied research project DIASTOR was initiated in collaboration with Disney Research Zurich, the ETH Zurich and several partners from the private sector including the Cinémathèque Suisse. In this project DIASTOR will work directly with the knowledge gathered in this resource and we will develop it further based on several restoration and digitization case studies with a variety of color film stock. As a result DIASTOR is involved in the restoration of *Das Cabinet des Dr. Caligari* by the Friedrich-Wilhelm-Murnau-Stiftung in Wiesbaden, currently under way under the supervision of Anke Wilkening at L`Immagine Ritrovata in Bologna. The DIASTOR research team investigates differently tinted and toned nitrate prints regarding their color schemes and the application of the various tints and tones. This study is now nearly completed, and will be presented for the first time at The Reel Thing conference in Richmond.

☯

The Alan Stark Award
Presented by Ralph Sargent, Film Technology Company

The Alan Stark Award honors individuals who have made a significant contribution through their efforts on a special project or in project management that contributes to, and supports, the work of moving image archives and/or the operations of AMIA. The Reel Thing is honored to host the presentation of this award, named for our long-time supporter, collaborator and friend whose enthusiasm and participation was so important to the evolution of this symposium.

☯

B R E A K

☯

Digital Color Decoding Of Kodacolor Film

Tom Aschenbach, Video and Film Solutions

Kodak's Kodacolor film recorded color information on black-and-white film by use of a method which included a lenticular array of lenses embossed on the base of the film and a color filter in front of the lens for both camera and projector. The position of lens, filter, and lenticular array size on the film are critical for the reproduction of the color. Because of the age of the remaining Kodacolor films, non-linear shrinkage and other decomposition effects have changed what was a constant in the color method. A software package to do digital color decoding of black-and-white scans of Kodacolor has been developed to enable high resolution scanning of Kodacolor on any scanner and decoding the color from those scans. This software can correct not only age-related problems, but also defects inherent in the format. Kodacolor is often identified, in black-and-white or its color state, by the vertical black lines characteristic of lenticular technology. This new software accurately interpolates just this area of vertical lines, providing for a more pleasant screening experience. The software also enables the color reproduction of originally shot Kodacolor that was duplicated via a contact print. This presentation will examine the software development, the Kodacolor format, and the use of specialized technology for recovering images created in obsolete film formats.

☯

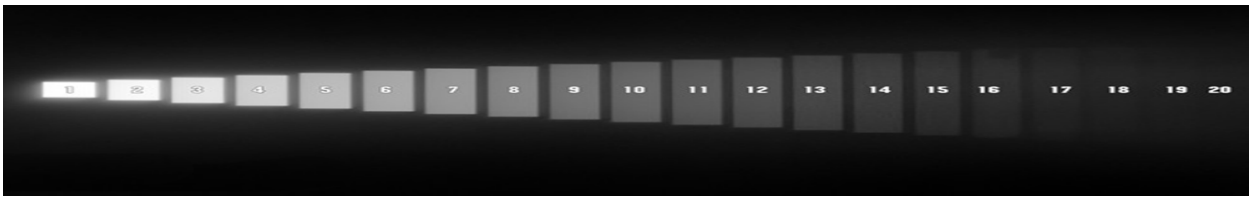

A Demonstrated Concept of High-Speed High-Dynamic Range Black-and-White Film Scanning

Sai Prasad, Prasad Group

Up until now, HDR scanning was done via a multiple exposure method during which a scanner will "stop the film" to capture images at different exposure levels. These images are then recombined into a single HDR image. This method significantly compromises the speed of scanning. This presentation will demonstrate the normal process of HDR imaging and then explain a patent-pending technique for HDR film scanning of black-and-white film stock (either print or negative) without affecting the maximum scan-rate of a scanner or its maximum resolution.

Motion picture scanning is different from normal still-imaging scanning. The resolution and dynamic range are of equal importance in stills but the speed of scanning is also a critical factor. A 90 minute feature has approximately 130,000 images to scan. With hundreds of thousands of hours of material in the world, so image scanning speed is a key factor. These three factors (dynamic range, resolution and speed) are usually competing factors in the film scanning world. If we increase one factor - e.g. dynamic range - it can affect speed, resolution or both.

A modern state-of-the-art high-end film scanner will be capable of scanning a usable dynamic range at or above that of color negative film at 4K horizontal resolution at speeds in excess of 2/3 real-time playback speeds. Exceeding real-time playback speeds by decreasing the horizontal resolution is also possible. The scan speed is dependent on the final required resolution. This type of compromise is typically also true for increasing the usable dynamic range of the scanned image.

Typical color film negatives have a dynamic range (Dmin to Dmax) of around ND3-3.5 (or 6-7 stops). In most cases the actual image dynamic range is usually less than this figure. These figures are within the usable dynamic range of the high-end film scanner. However with black-and-white this is not the case. These film stocks, positive or negative, can have dynamic ranges 3, 4 or more stops greater than that of color negative film. With large amounts of archival black-and-white film now being scanned for restoration, digital archive or repurposing, it is important that this gap be bridged in a way that minimizes or eliminates the typical "competing" 3-way compromises involved in normal film scanning.

The concept of HDR imaging is by no means a new concept in the field of photography or film scanning. It has been used for many years to increase the dynamic range of a capture image. The basic concept is to capture or scan bracketed exposures of a single scene or image then combine these bracketed images into a single HDR image.

The way to bracket images is to change the exposure of each image is usually by:

- adjusting the lens aperture differently for each bracketed image
- changing the exposure time for each bracketed image or
- changing the light level of a scene for each bracketed image or
- any combination of the above

The final combined HDR image is made by choosing the "most appropriately" exposed part of the image from each bracketed image and combining into a single resultant image. This, in digital imagery, is typically done at the pixel level. A typical HDR image will use a combination of two, three or more bracket images to produce the final image.

Using the typical approach for HDR can significantly improve the usable dynamic range of any resultant image over any one pass or image capture on its own. However to perform the HDR imaging means multiple images must be captured. This process slows the maximum speed of any scanning process down by at least a factor equal to the number of images taken to produce the HDR image. For example, if two bracketed images are to be used to make a single HDR image there are at least two images "taken". This takes a minimum of two times the speed to achieve plus whatever time is required to change the parameter used for the bracketed exposures be it lens aperture, exposure time or light-level control. The resulting image has maintained scanning resolution, increased dynamic range but compromised the speed of the process. Clearly a new method is required if the time to perform this task is not to be compromised.

Fortunately there is a property of black-and-white film stocks which can be used to our advantage. Black-and-white stocks rely on retained silver to produce density range. This means their film density is exactly the same at any given spectral frequency or "color" of light that passes through it. Typically we "normally" illuminate black-and-white film on a color scanning camera and each "color" will have exactly the same exposure. We might chose only one "color" as the black-and-white image. However this "exposure balance" is not true. There will be some difference between each of the captured colors based on the color

temperature of the light source used to illuminate the image. For example in a typical three-color camera system, if the light source is warmer the red channel will have a slightly higher exposure than green channel and the blue channel will have a slightly lower exposure than the green channel. If the light source is cooler then the opposite is true. The blue will be slightly more exposed and the red will be slightly less exposed. This is not a problem for black-and-white stocks when choosing only one color to capture the image.

If we take this a step further and exaggerate this color temperature difference we significantly affect the degree of over- or underexposed images on the red and blue channels. If we go further and accurately control the color temperature of the light source we can accurately control the exposure levels of each of the color sensors. The resulting response of each color sensor is the representation of the density of the bracketed black-and-white original. This is done at the maximum color resolution of the sensor. Bracketed exposures of a scanned black-and-white film image can be created without the need for multiple scan passes, and thus, no change in scanning speed. If this is now combined with a real "at capture time" HDR combining process, the result is HDR at full resolution at maximum capture speed.

The increase in film HDR is effectively at maximum scanning speed and maximum resolution is almost limitless. The practical limitation is the amount of spectral control over the illuminating light source (dynamic range and colour spectrum control) and the corresponding number of capture cameras covering the same controlled color spectrum. It is possible to have 5, 6 or more spectral control points in the light source and corresponding spectral capture cameras delivering 5, 6 or more exposure range images which can be combined into a single HDR image. The research team at DFT demonstrated it can easily produce a ND1.2 (4 stop) improvement of usable dynamic range at both 4K and 2K horizontal resolution on black-and-white film at maximum scan speed of the scanning device using 3 cameras.

HDR imaging of black-and-white motion picture film has been achieved at the maximum scan speeds of DFT's existing product. This was accomplished by controlling the spectral composition of the light source passing through a black-and-white film image. An image sensor at the same spectral frequencies was then used to capture the exposure bracketed images at maximum scan speed. These bracketed images were then combined at "scan-time speed" to produce HDR images with greater than ND1.2 (4 stop) improvement in usable dynamic range without any speed compromise to the scanning or recording process.

Text by John Virtue (john.virtue@dft-film.com), COO Digital Film Technology (DFT) GmbH

☯

The Digital Revival of Four Gerhardt Lamprecht Films

Daniel Meiller Stiftung Deutsche Kinemathek

Gerhard Lamprecht (1897 - 1974) was not only a diligent filmmaker who made over sixty films, but he was also a passionate film collector - not just of his own films, but of any film and film-related material he could

acquire. Due to his ambitious initiative, the Berlin-based Deutsche Kinemathek was founded in 1963, with his extensive and eclectic collection as the cornerstone of this new film archive. In celebration of the 50th anniversary of the Kinemathek, four of Lamprecht's rare silent films were selected for digital restoration and presentation as DCPs. These films include *Die Verrufenen* (1925, *Slums of Berlin*), *Die Unehelichen* (1926, *Children of No Importance*), *Menschen Untereinander* (1926, *Men Amongst Themselves*), and *Unter der Lanterne* (1928, *Under the Lantern*).

At first, the project appeared to be an easy and straightforward task, because three of the titles had been thoroughly restored using traditional analog methods. However, given the availability of digital scanning technology, it was decided to bypass the existing preservation elements and to return to the source material for these previous restorations. In all four cases, the original negatives were lost in the Second World War, so the project was based on 16mm elements Lamprecht had made in the 1930s.

Depending on the optical quality of the extant material, either a 2K ARRI Scan or an HD Spirit DataCine were used to acquire the images from the 16mm sources. Scanning, digital restoration (using the Diamant platform) and mastering was carried out in Berlin and Munich by ARRI Film & TV Services. What started out as simple 'digitize for access' project based on existing preservation work became a series of complex new restorations that - in two of the four cases - involved complete re-editing of the source materials.

The presentation will showcase the four digital restorations and their respective workflows, and will focus on the decision-making process that was strongly influenced by the characteristics of the digital restoration technologies available to the project.

☯

Restoration of a Large Format Feature: *It's A Mad Mad Mad Mad World*

Robert A. Harris, archivist, Karen Stetler, The Criterion Collection and Andrew Oran, FotoKem

Shortly after its 1963 road show premiere, Stanley Kramer's comedy extravaganza, *It's a Mad Mad Mad Mad World*, was cut by about 40 minutes from its original 202 minute running time. The deletions, from both the original Ultra-Panavision 65mm camera negative and the separation masters, were, in a practice not atypical for the era, junked. Approximately 20 minutes of cut footage still exists in the form of vintage 70mm release prints or audio-only elements. The Criterion Collection, in association with film archivist Robert A. Harris, has undertaken a new high definition "extended" version of the film that includes more rediscovered road show footage and audio than has previously been available. Over the past 15 years, Harris has collected, archived and logged over 150 trims excised from the road show version. The project was daunting, as there was no surviving print and no paper record of this original version. All of the surviving image material was heavily faded, most was warped and exhibited vinegar syndrome. Some was so badly deteriorated that it could neither be transferred nor run through an optical printer. This presentation will discuss the origin of the project and how it evolved from analog to digital over a decade, explain how problems such as optical aberrations and missing audio were handled, and the discuss the development of methods to compensate for color fading and the adaptation of 3D warping technology to remove the rectification on trims originally modified for projection on highly curved screens.

☯

The Reel Thing Technical Symposium is organized and coordinated by Grover Crisp and Michael Friend

The Reel Thing regularly video-records these proceedings. These recordings are the official record of the event and are the sole property of The Reel Thing. The intended use of these recordings is to produce publicly available programs which may appear on AMIA or other websites, and which may also be made available in other commercial and non-commercial contexts at the discretion of The Reel Thing. Attendance at this event constitutes your consent to appear without compensation in these recordings and in any versions of this event produced or authorized by The Reel Thing. The organizers of The Reel Thing are always interested in new and important developments in conservation, preservation, restoration and digital asset management. If you have a project or a technology that you would like to share with the community, please contact us at any time during the year. We are also interested in feedback, criticism, and suggestions for future presentations. Let us know how we can make The Reel Thing better and more useful for you.

Grover Crisp
grover_crisp@spe.sony.com
(310) 244- 7416

Michael Friend
michael_friend@spe.sony.com
(310) 244 -7426